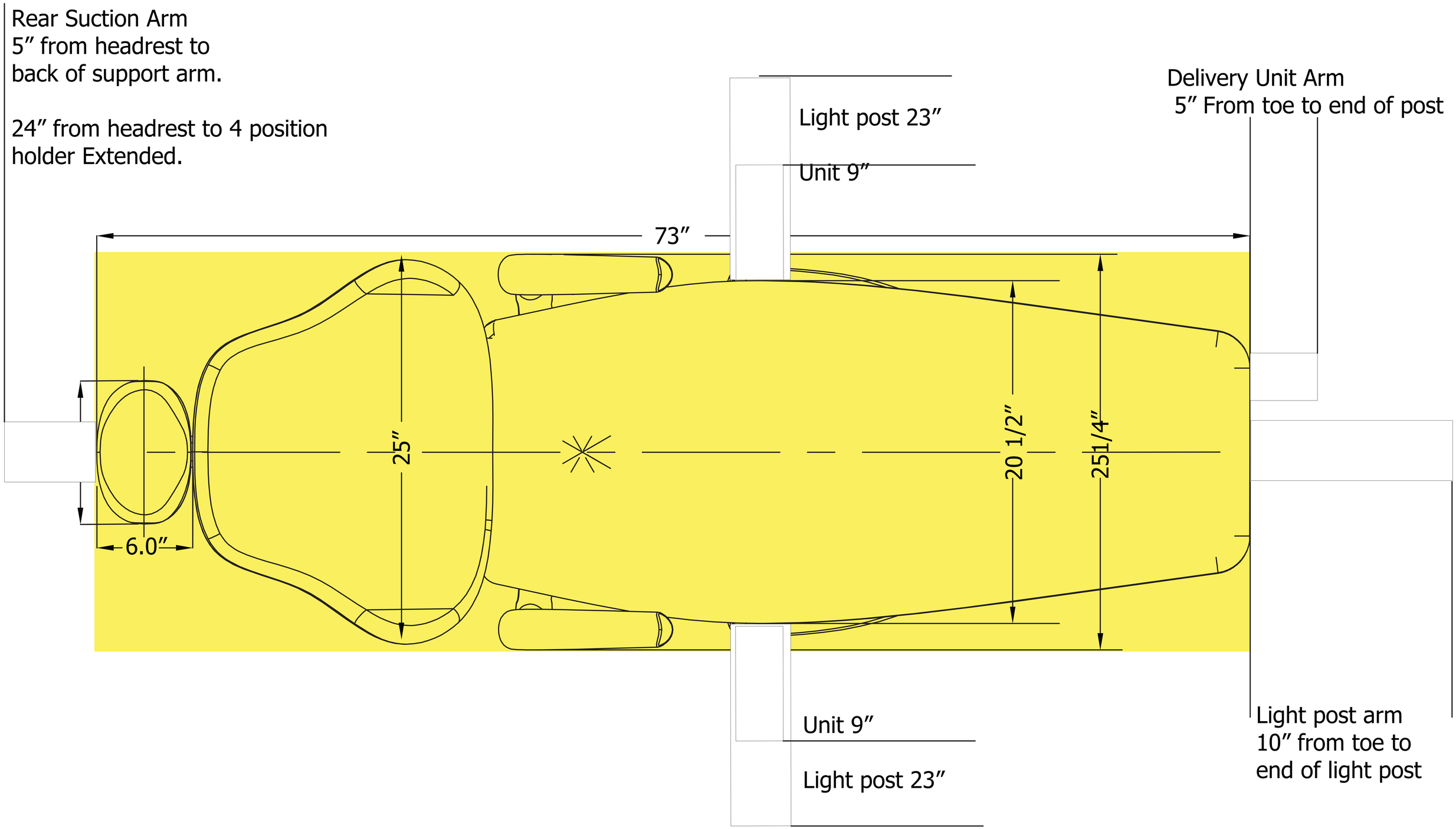
Rear Suction Arm
5″ from headrest to
back of support arm.
24″ from headrest to 4 position
holder Extended.
Light post 23″
Unit 9″
Delivery Unit Arm
5″ From toe to end of post
73″
25″
20 1/2″
25 1/4″
6.0″
Unit 9″
Light post 23″
Light post arm
10″ from toe to
end of light post